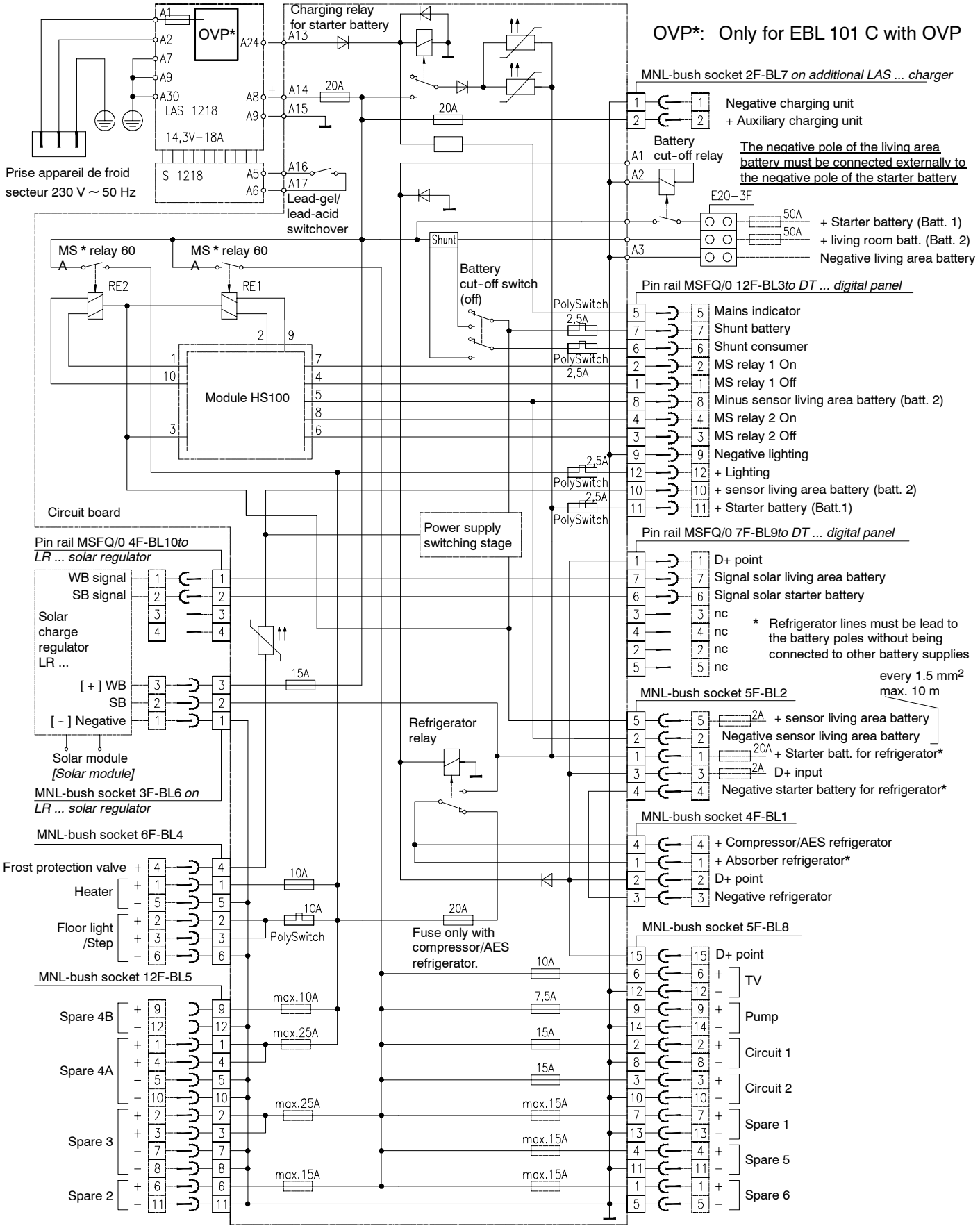G Block diagram/wiring diagram